Round 2 - Friday, May 6, 2022

SHOTLINK

Simmons Bank Open for the Snedeker Foundation

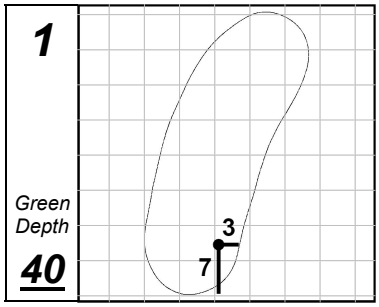

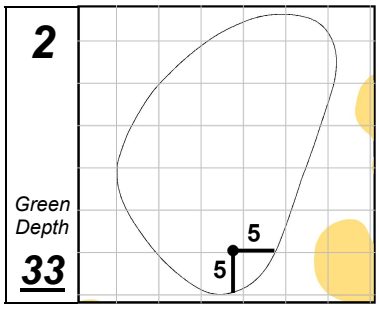

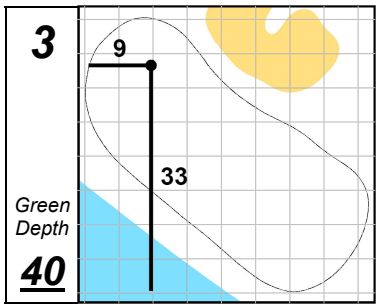

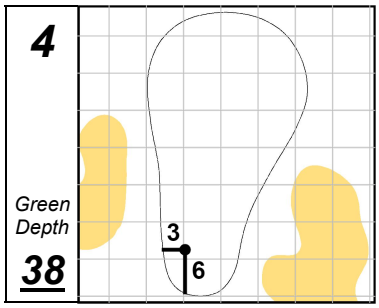

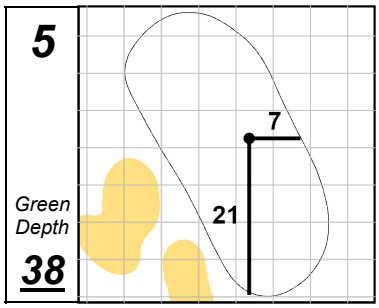

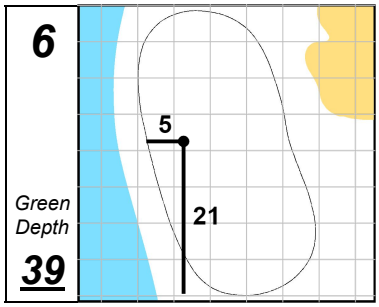

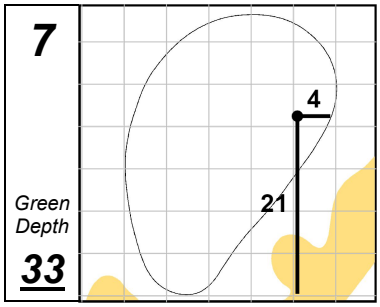

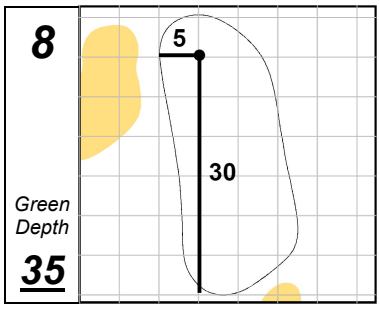

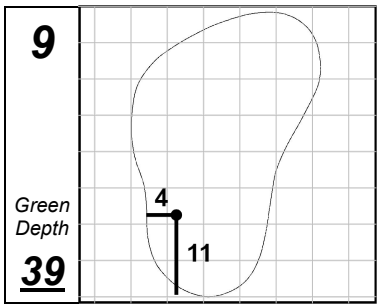

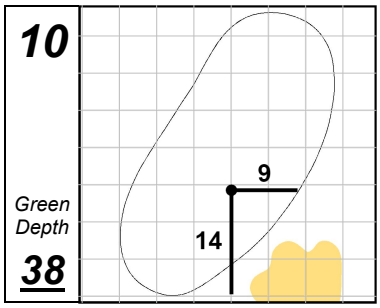

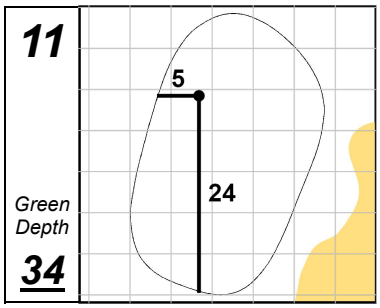

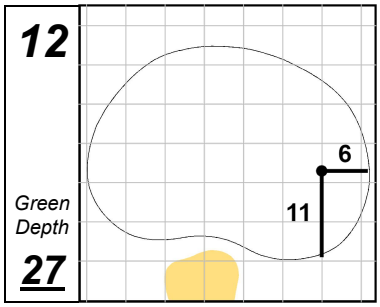

The Grove

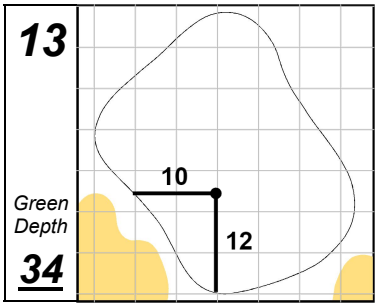

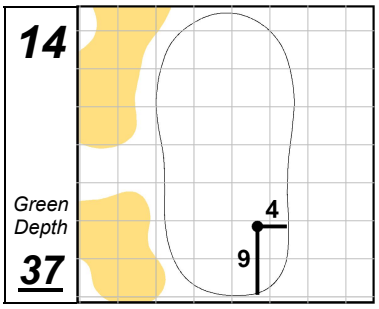

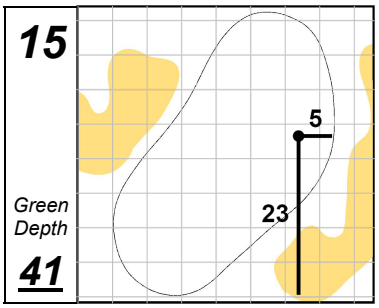

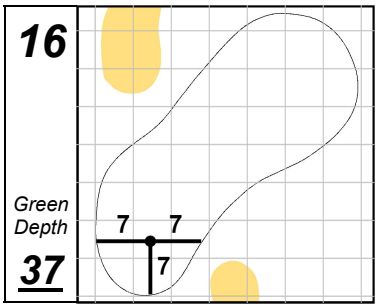

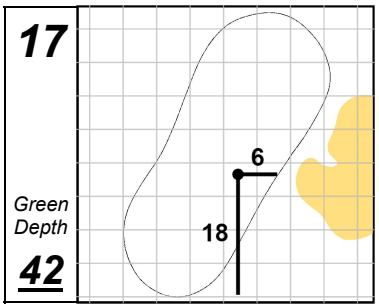

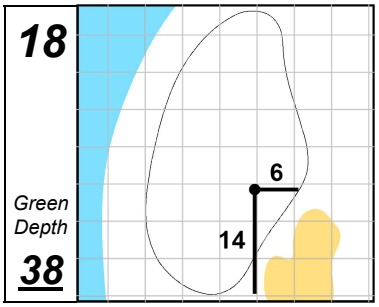

Each side of a complete square on the green represents 5 YARDS.

Thursday, May 5, 2022 9:36:02 AM